Method for securing impellers against axial movement

COPY COMPLIANT to the original document resident on the computer system at the time of printing

Index

1. Purpose. 3

2. Scope. 3

3. Definitions. 3

4. General procedure: description. 4

5. Rotor with clearance fit impellers and protected shaft 5

5.1. Axial locking of the impeller for back-to-back configuration 5

5.2. Axial locking of the impellers for “in line” configuration 6

5.3. Assembly procedure of a rotor with impellers in back-to-back configuration and clearance fit 7

5.4. Assembly procedure for in line impellers and clearance fit 9

6. Rotor with shrink fit impellers and protected shaft 12

6.1. Axial locking of the impeller for back-to-back and in line configuration 12

6.2. Assembly procedure 12

7. Rotor with shrink-fit impellers and non-protected shaft 13

7.1. Axial locking of the impeller for back-to-back configuration 13

7.2. Assembly procedure 15

COPY COMPLIANT to the original document resident on the computer system at the time of printing

1. Purpose.

The procedure is related to the multistage pumps and the securing method of the impellers against axial movement.

2. Scope.

This procedure is applicable to BB3, BB4 and BB5 pumps.

The procedure is applicable for the Nova Milanese and La Spezia plants

3. Definitions.

BB: between bearings (API610).

BB3: axially split, multistage, between-bearings pumps (API 610)

BB4: single-casing, radially split, multistage, between-bearings pumps (API 610)

BB5: double-casing, radially split, multistage, between-bearings pumps (API 610)

Shrink-fit impeller: impeller mounted on the shaft with an interference fit, obtained by heating the impeller before mounting it on the shaft, to facilitate the assembly by exploiting thermal expansion.

Clearance fit impeller: impeller mounted on the shaft with a clearance fit.

Protected shaft: the external surface of the shaft is covered with sleeves

COPY COMPLIANT to the original document resident on the computer system at the time of printing

4. General procedure: description.

The impellers of multistage pumps are usually individually located along the shaft by split rings or shaft shoulders that limit their axial movement in direction of hydraulic thrust. The impellers can be also secured against axial movement in direction opposite to hydraulic thrust. The direction of the axial thrust depends on the geometry of the impeller and the diameter of wear rings.

API 610 provides the following indications regarding the rotors of multistage pumps:

- 9.2.2.1 *Impellers of multistage pumps shall be individually located along the shaft by a shoulder or captive split ring in the direction of normal hydraulic thrust.*
- 9.2.2.2 *Rotors with clearance-fit impellers shall have mechanical means to limit impeller movement in the direction opposite to normal hydraulic thrust to 0.030 in. (0.75 mm) or less.*
- 9.2.2.3 *If specified, rotors with shrink-fit impellers shall have mechanical means to limit movement in the direction opposite to normal hydraulic thrust to 0.030 in. (0.75 mm) or less.*

Based on the TPI standard design 3 different rotor configurations can be considered:

- Rotor with clearance fit impellers and protected shaft.
- Rotor with shrink-fit impellers and protected shaft
- Rotor with shrink-fit impellers and non-protected shaft

This procedure describes the securing methods and the assembly procedures for each rotor configuration.

To determine the type of impeller/shaft assembly in relation to type of pump and operating conditions refer to **SOP-463**.

COPY COMPLIANT to the original document resident on the computer system at the time of printing

5. Rotor with clearance fit impellers and protected shaft

5.1. Axial locking of the impeller for back-to-back configuration

A typical configuration of the rotor with protected shaft and back-to-back impellers is represented in the figure below:

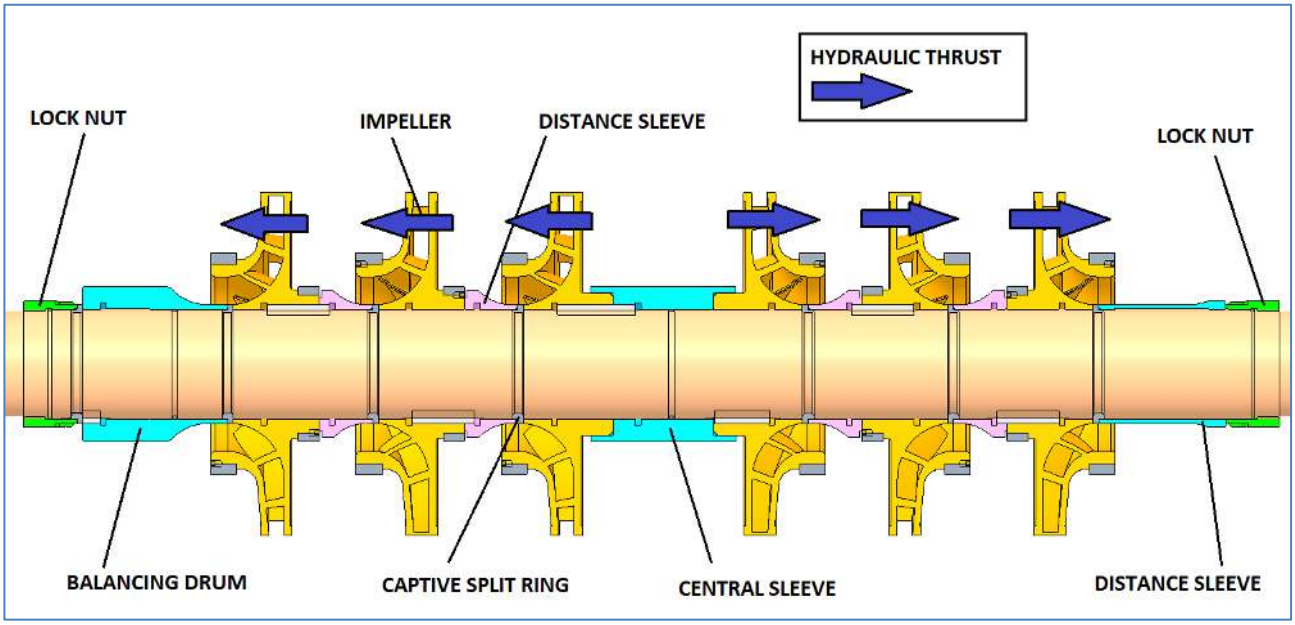

Figure 1 - Rotor with clearance fit impellers back-to-back and protected shaft

The impellers are secured against axial movement **both** in the direction of hydraulic thrust and in the opposite direction. A split ring under the impeller hub limits the axial movement in the direction of hydraulic thrust, while the distance sleeves and central bush act in the opposite direction. Distance sleeves and balancing drum are driven by keys.

COPY COMPLIANT to the original document resident on the computer system at the time of printing

5.2. Axial locking of the impellers for "in line" configuration

A typical configuration of the rotor with protected shaft and in line impellers is represented in figure below:

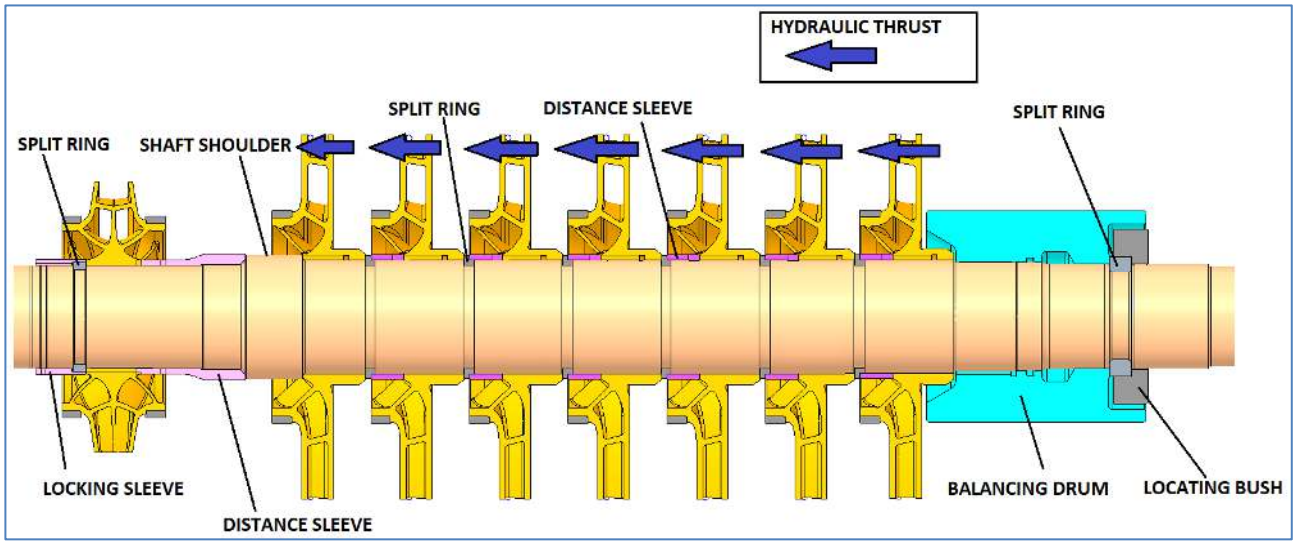

Figure 2 - Rotor with clearance fit "in line" impellers and protected shaft

The single suction impellers are secured against axial movement **both** in the direction of hydraulic thrust and in the opposite direction. The impellers are fitted in line and the axial movement is limited in direction of hydraulic thrust by the shaft shoulder and the split rings. A distance sleeve may be present between the impellers.

In the same way, the axial movement of the double suction impeller (if present) is limited by the shaft shoulder and a captive split ring with locking sleeve. The locking sleeve is connected to the shaft by set screws.

COPY COMPLIANT to the original document resident on the computer system at the time of printing

5.3. Assembly procedure of a rotor with impellers in back-to-back configuration and clearance fit

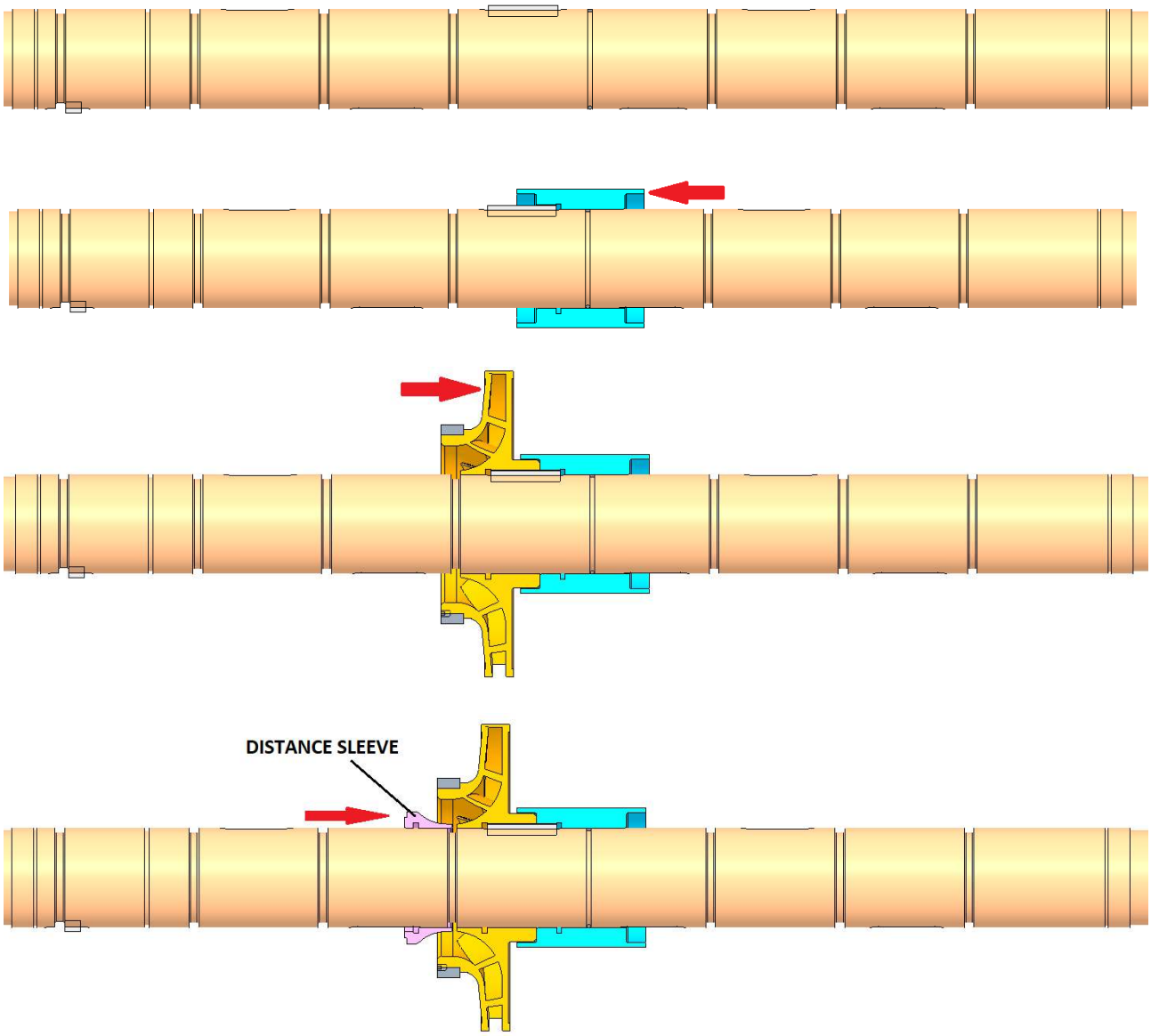

COPY COMPLIANT to the original document resident on the computer system at the time of printing

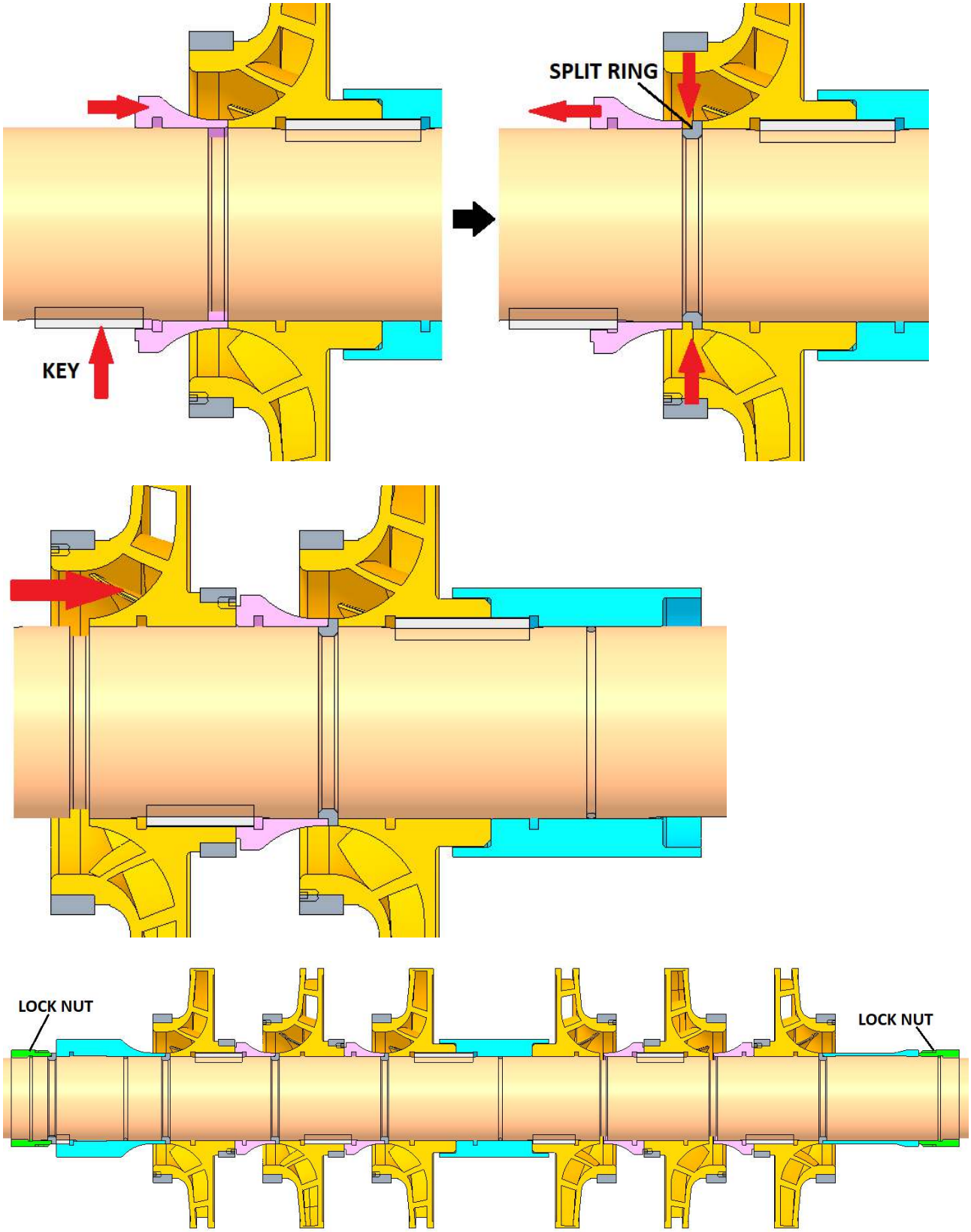

Figure 3 - Assembly procedure of a rotor with impellers in back-to-back configuration and clearance fit

COPY COMPLIANT to the original document resident on the computer system at the time of printing

5.4. Assembly procedure for in line impellers and clearance fit

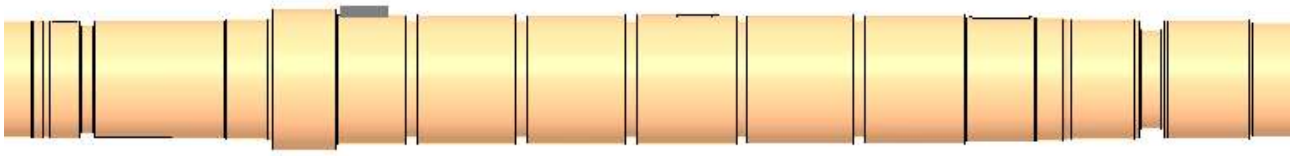

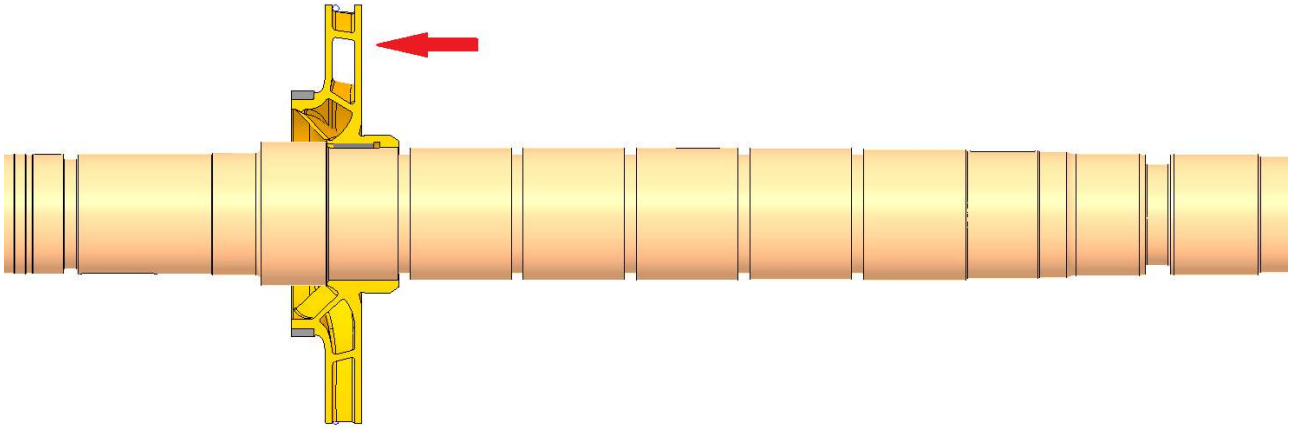

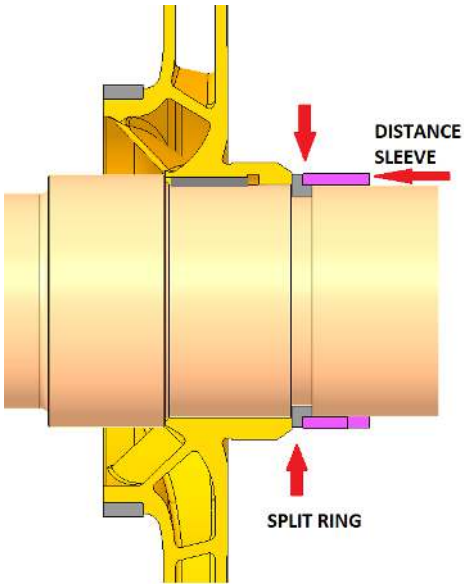

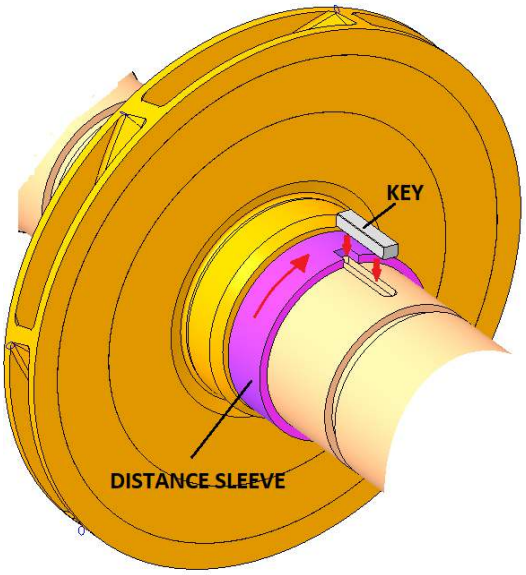

COPY COMPLIANT to the original document resident on the computer system at the time of printing

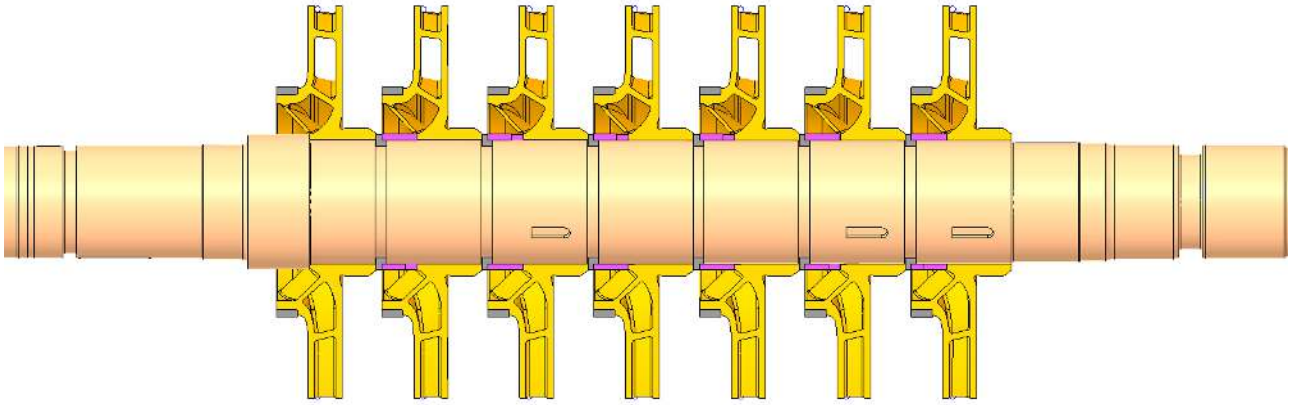

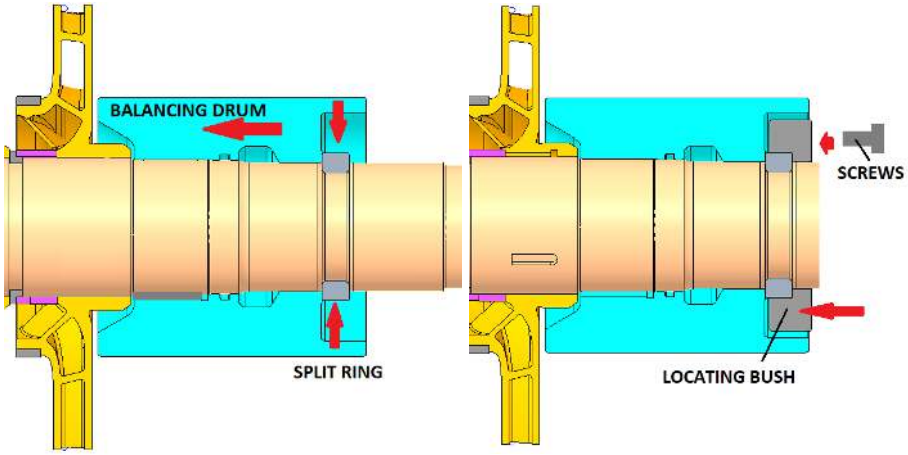

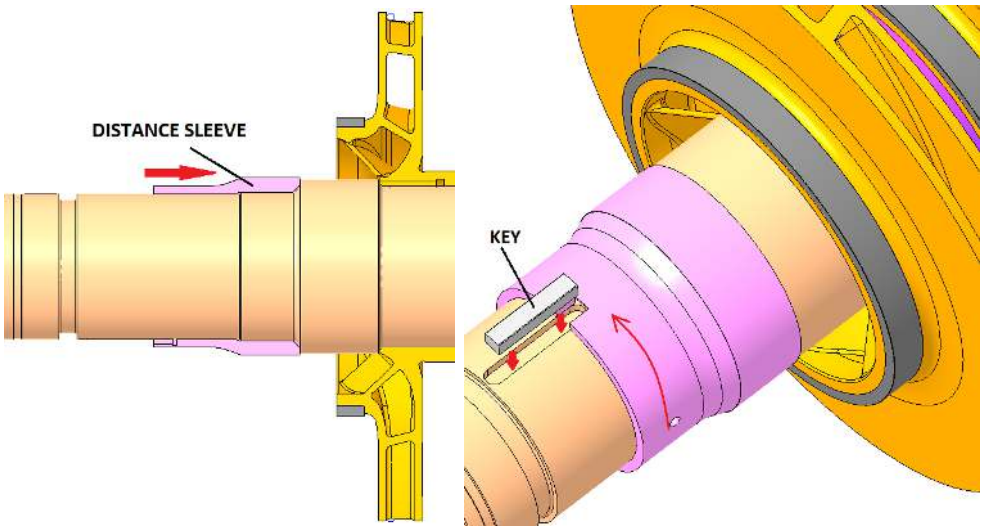

COPY COMPLIANT to the original document resident on the computer system at the time of printing

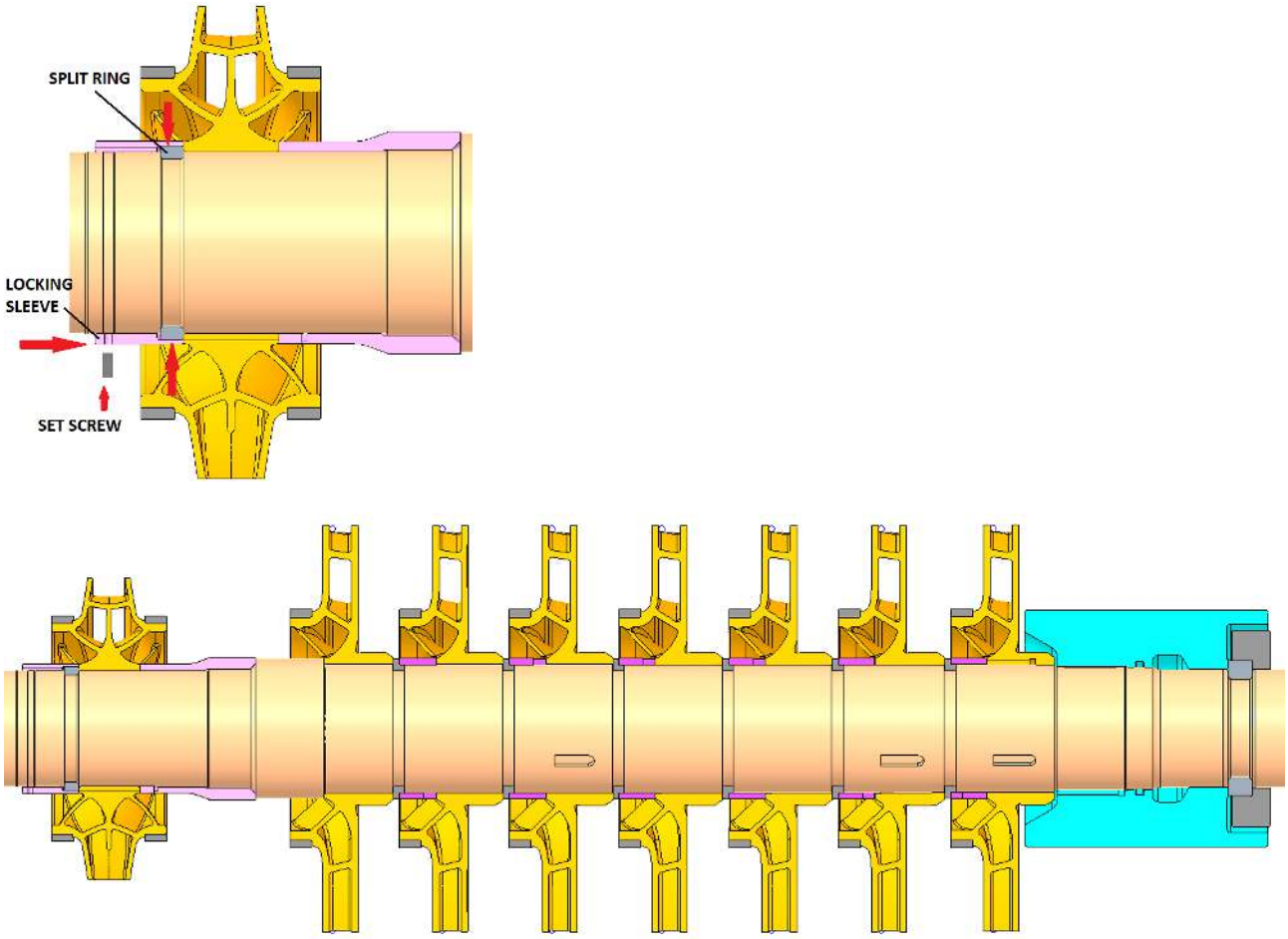

Figure 4 - 5.4.Assembly procedure for in line impellers and clearance fit (in line impellers)

COPY COMPLIANT to the original document resident on the computer system at the time of printing

6. Rotor with shrink fit impellers and protected shaft

6.1. Axial locking of the impeller for back-to-back and in line configuration

The impellers are secured against axial movement **both** in the direction of hydraulic thrust and in the opposite direction. The impellers are locked in the same way as in the clearance fit version, with the addition of an interference fit.

6.2. Assembly procedure

The assembly procedure is the same of as the clearance fit version with the only difference that the impeller must be heated before assembly. The shaft has a stepped diameter with pitch 0.2 mm to make the assembly of the impeller easier.

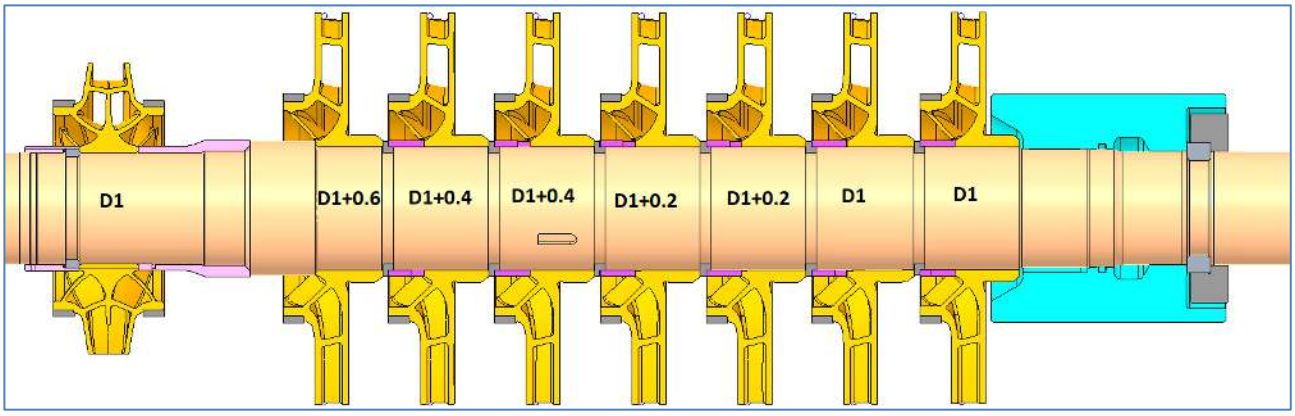

Figure 5 - Shaft with stepped diameter

COPY COMPLIANT to the original document resident on the computer system at the time of printing

7. Rotor with shrink-fit impellers and non-protected shaft

7.1. Axial locking of the impeller for back-to-back configuration

A typical configuration of the rotor with non-protected shaft and back-to-back impellers is represented in the figure below:

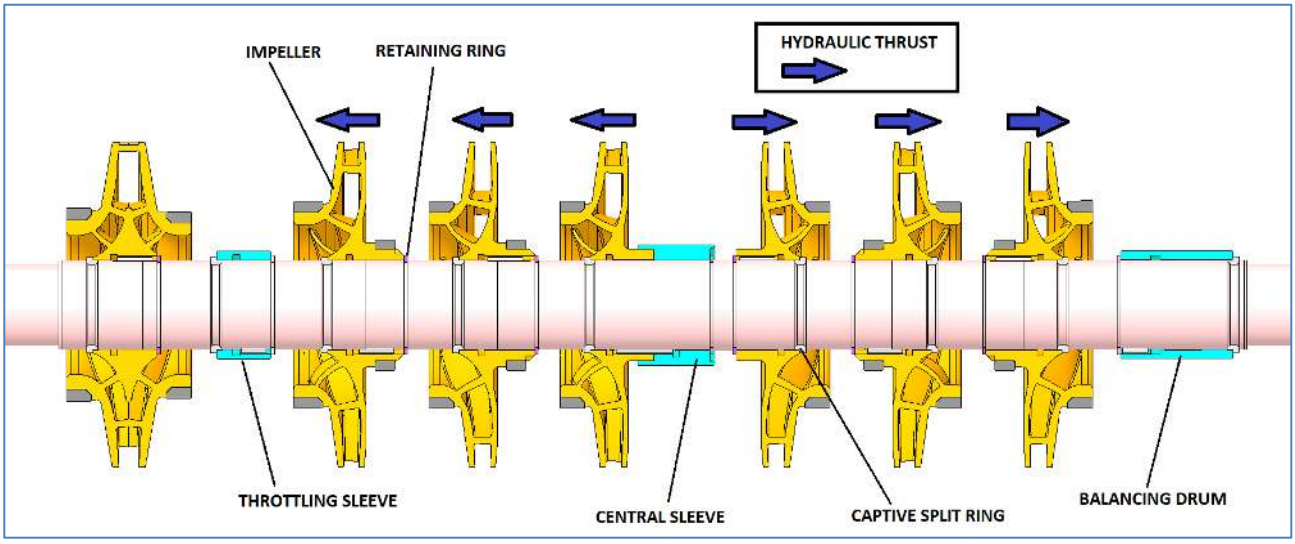

Figure 6 - Rotor with shrink-fit impellers and non-protected shaft in back-to-back configuration

Impellers and sleeves are usually secured against axial movement only in the direction of hydraulic thrust, using a captive split ring under the impeller hub that limits the axial movement. Due to the shrink-fit is not necessary to secure the impeller in the opposite direction. If requested, it is possible to limit the axial movement of the impeller also in direction opposite to the hydraulic thrust adding a retaining ring.

When the retaining ring is present, it is necessary to provide a sufficient distance between the components to be able to use the pliers to assemble/disassemble the retaining ring (see figure below).

COPY COMPLIANT to the original document resident on the computer system at the time of printing

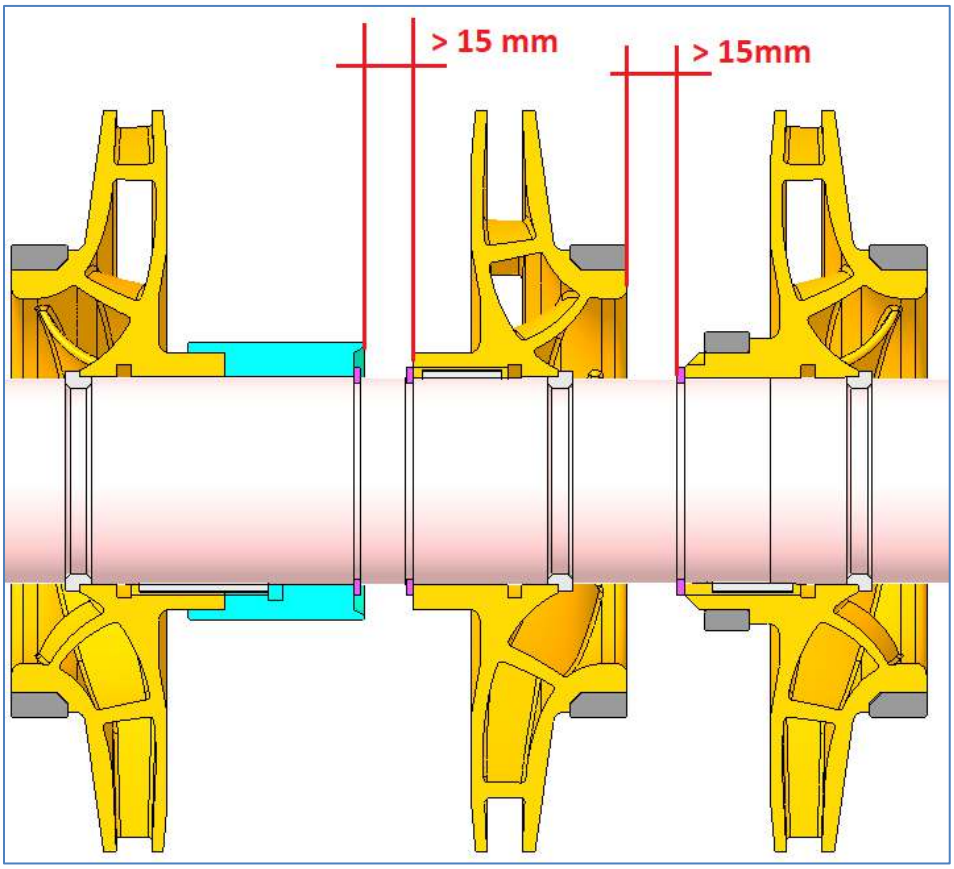

Figure 7 - Minimum clearance required for pliers

COPY COMPLIANT to the original document resident on the computer system at the time of printing

7.2. Assembly procedure

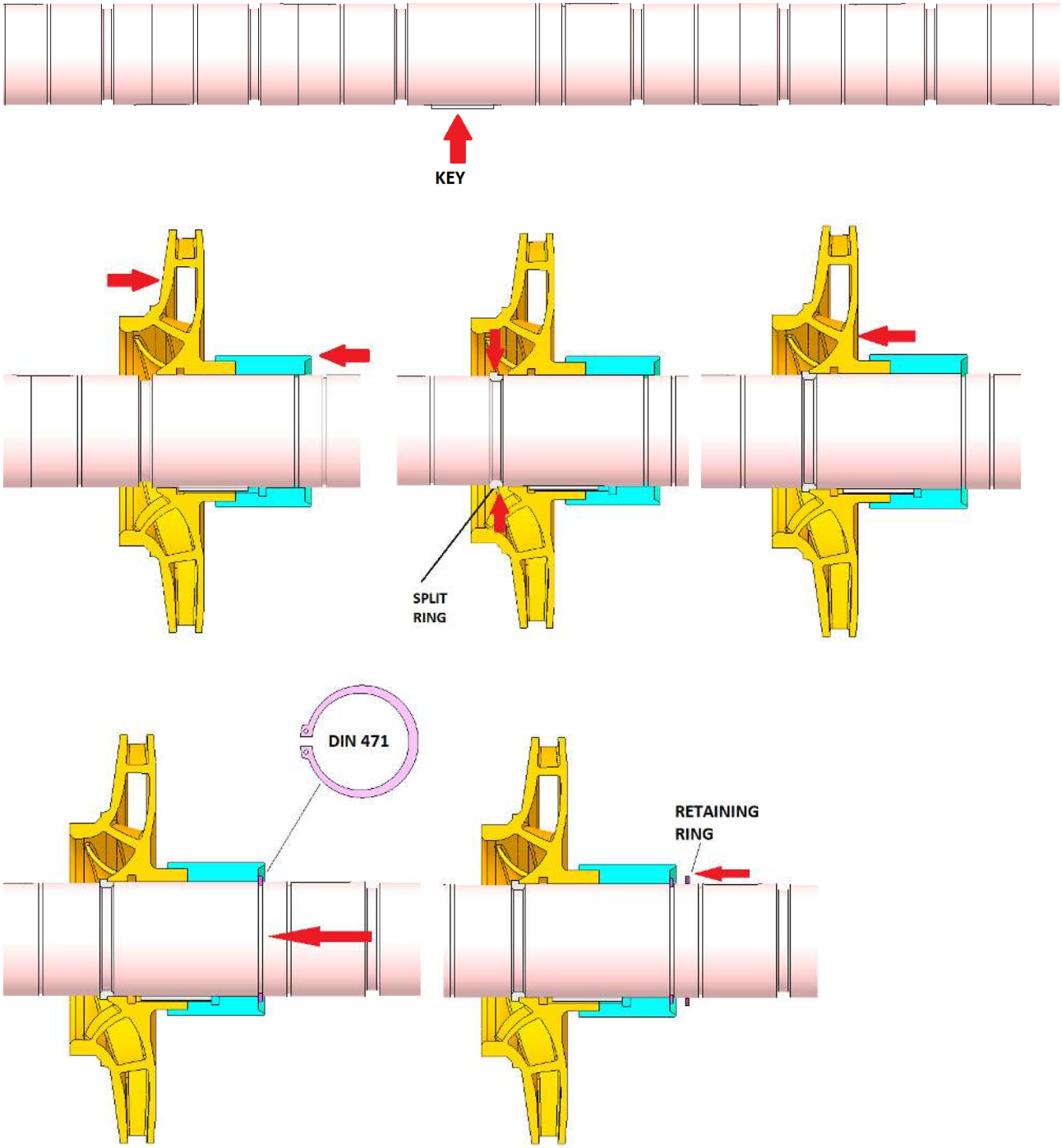

COPY COMPLIANT to the original document resident on the computer system at the time of printing

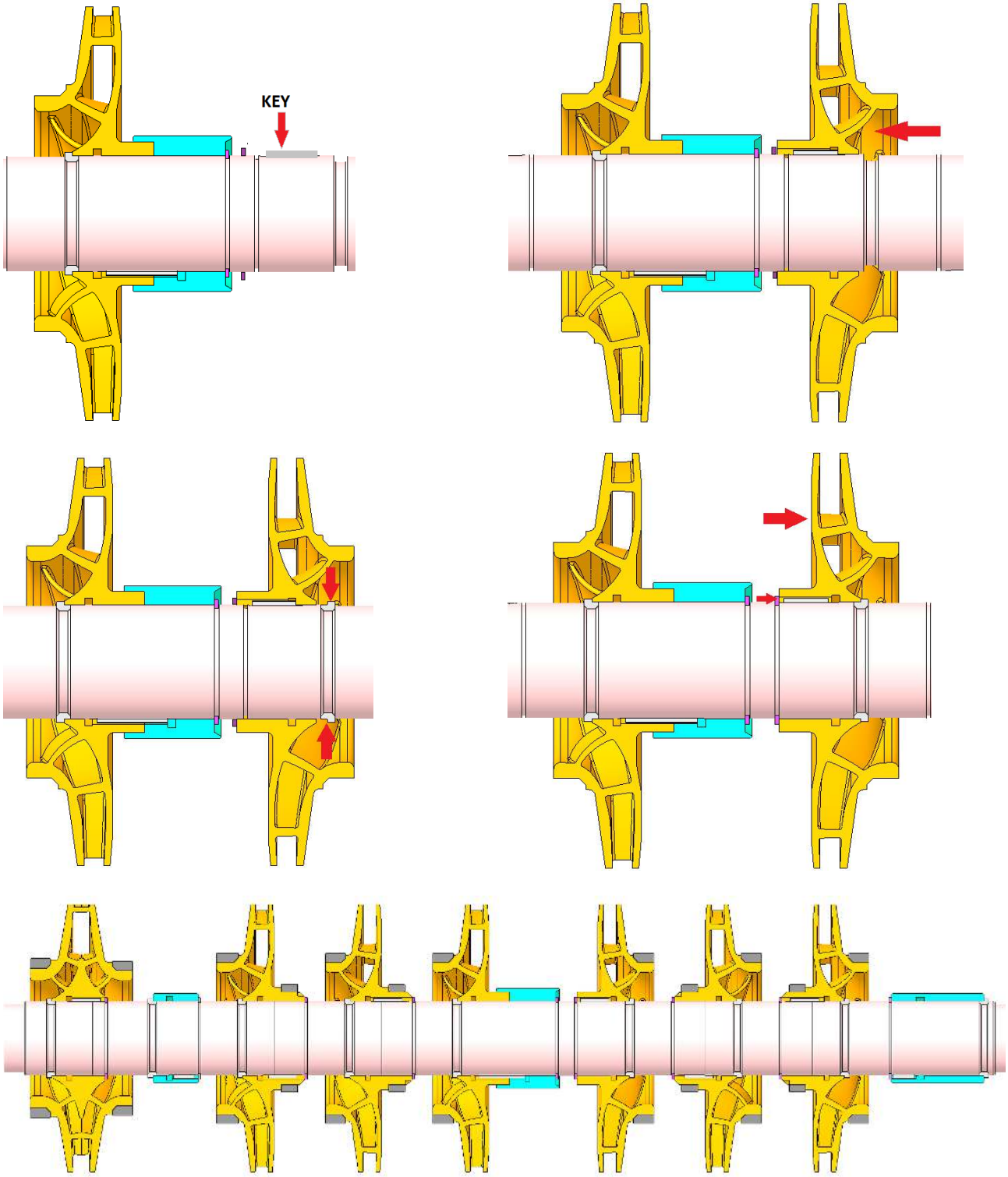

Figure 8 - Assembly procedure for a rotor with shrink-fit impellers and non-protected shaft

COPY COMPLIANT to the original document resident on the computer system at the time of printing